Gusher Pumps 7800 Series Vertical Pump Drawing

3450 R.P.M

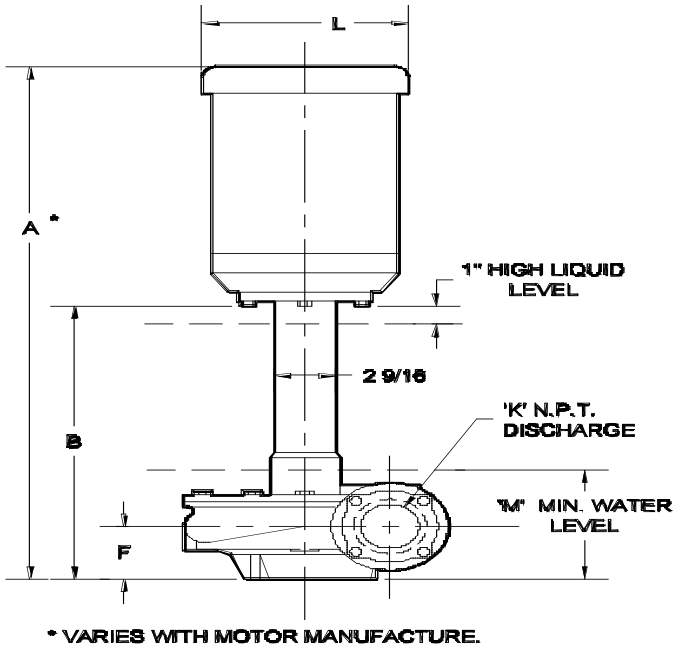

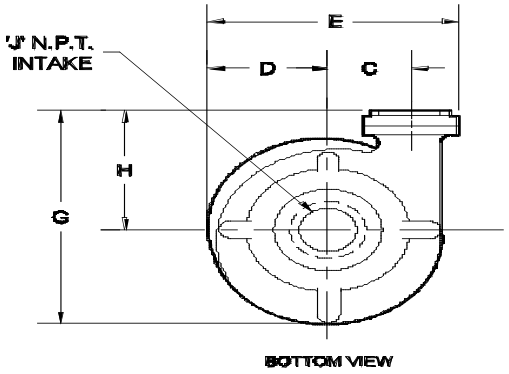

Model	HP	FR	A	B	C	D	E	F	G	H	J	K	L	M	Check
	---	143T	26.06	14.25											
11018-NS	2	145T	27.06	14.25								1	7 3/16		
11019-NS	3		28.00	26.25	3 1/4	3 3/4	8 5/16	2 3/8	8 1/8	4 1/4	1 1/4	OR		6 3/4	
	5	184T	29.12	14.25								1 1/2	8 1/2		
	7 1/2		30.62	14.25											
	3	145T	28.00	14.37									7 3/16		
11019-A	5	184T	29.25	14.37	3 1/2	3 7/8	8 9/16	2 3/8	8 3/8	4 3/8	2	1 1/2	8 1/2	6 1/2	
	7 1/2		30.75	14.37											
	5	184T	30.25	15.31									8 1/2		
11031-NS	7 1/2		31.75	15.31	4 3/4	4 13/16	11 15/16	3 1/16	11 5/8	6 5/8	2 1/2	2		7 13/16	
	10	215T	32.00	15.31									10 3/8		
	15		33.12	15.31											
	5	184T	30.37	15.50									8 1/2		
	7 1/2		31.87	15.50											
11032-NS	10	215T	32.12	15.50	3 3/4	4 5/8	11 1/16	3 3/8	11 3/4	6 3/4	3	3	10 3/8	8	
	15		33.25	15.50											
	20	256T	36.50	15.00									13 1/4		
	25	284T	39.75	15.00									15 5/8		

MAT'L OF CONSTR: CAST IRON

WEGOTPUMPS.COM LLC

S.N.:

WITH: HP: RPM: 3450 FRAME:

REV:0.2

GUSHER

Gusher Pumps Inc. 22 Ruthman Drive, Dry Ridge, KY 41035

MODEL:

Certified only when signed:	Drawn: BRANN	Date:6/2/99		
	Approved:	Date:	REV:0.0	**AK REFERENCE**

ENG.033